DWG. SIZE	DWG. NO.
D	032–7406

REVISIONS

SYM.	E.C.N.	DATE	APVD.
A	23978	5/19/99	
	REVISED & REDRAWN		
B	24215	4/18/00	
	REVISED & UPDATED		

Go to VARIAC.com to purchase and for technical support. Made in the USA

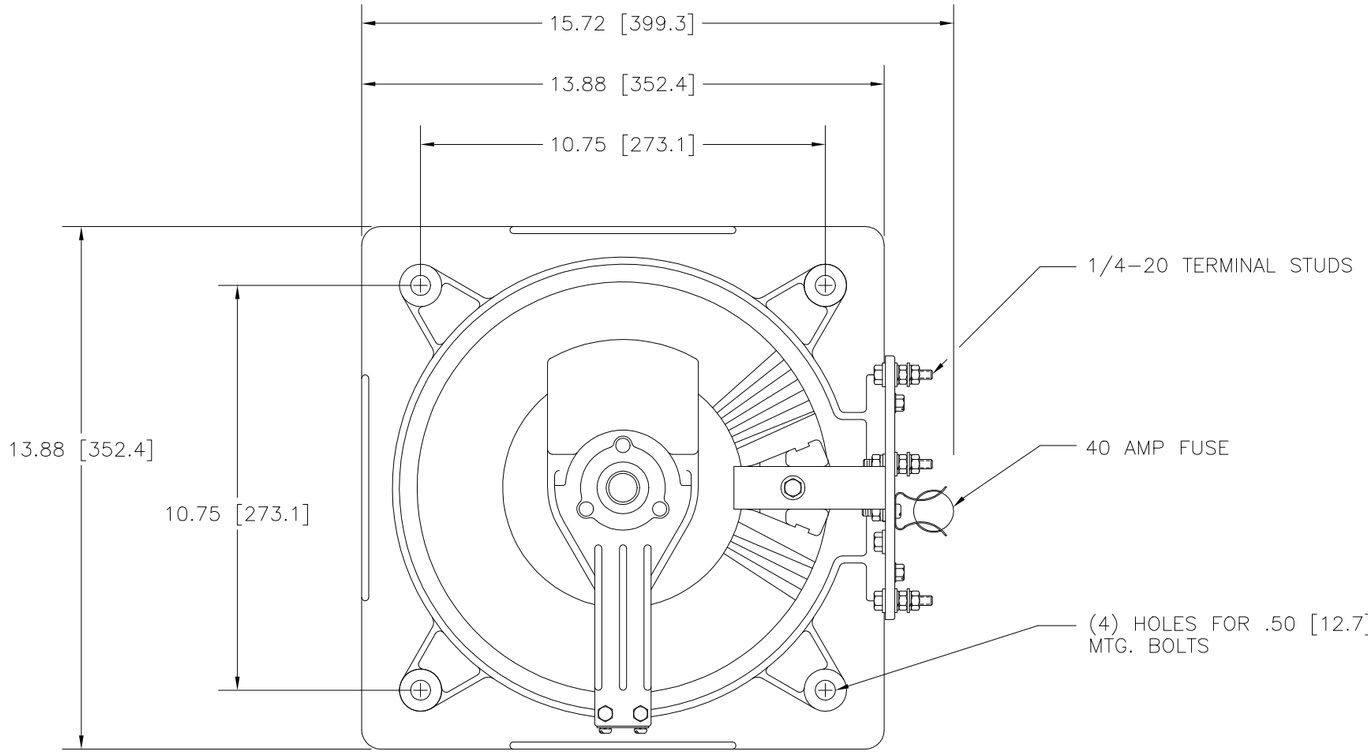

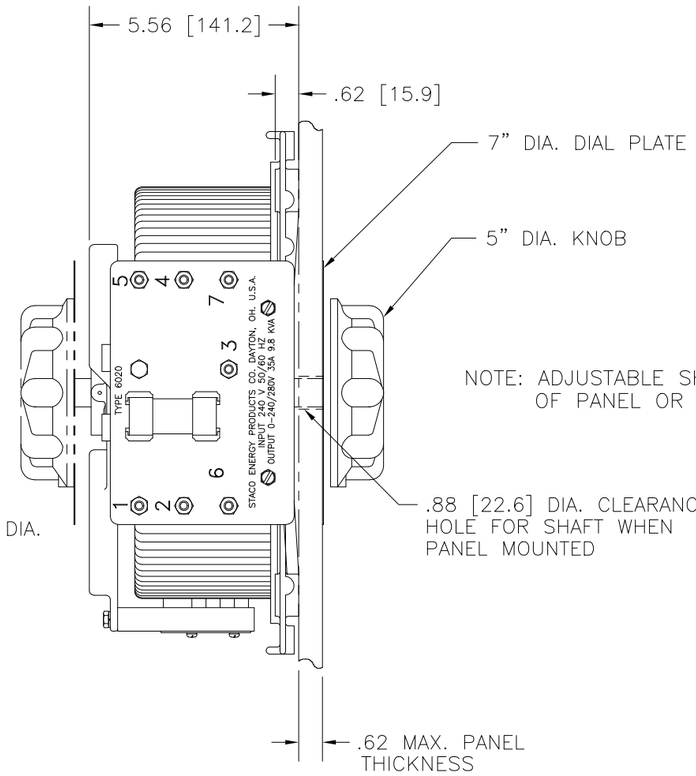

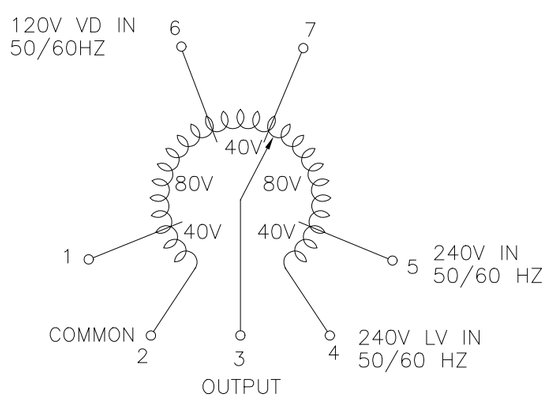

SCHEMATIC

VIEW FROM BASE END

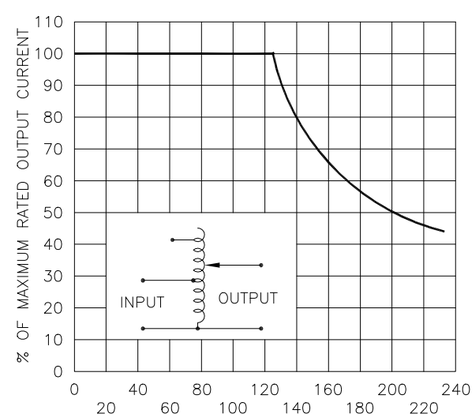

$$\frac{\text{OUTPUT VOLTAGE}}{\text{INPUT VOLTAGE}} \times 100$$

FIGURE A

MAXIMUM OUTPUT CURRENT OF ANY DUAL INPUT VOLTAGE OR VOLTAGE DOUBLER UNIT OPERATED AT LOWER INPUT VOLTAGE.

MAXIMUM OUTPUT CURRENT IN OUTPUT VOLTAGE RANGE FROM 0 TO 25% ABOVE LINE VOLTAGE. AT HIGHER OUTPUT VOLTAGES, OUTPUT CURRENT MUST BE REDUCED ACCORDING TO RATING CURVE, FIGURE A.

‡ MAXIMUM KVA AT MAXIMUM OUTPUT AND CORRESPONDING DE–RATED CURRENT. MAXIMUM KVA AT LOWER OUTPUT VOLTAGES MAY BE CALCULATED FROM RATING CURVE, FIGURE A.

SPECIFICATIONS

WIRING	INPUT VOLTS	INPUT HERTZ	OUTPUT VOLTS	OUTPUT MAX. AMPS	OUTPUT MAX. KVA	SHAFT ROTATION FOR INCREASE VOLTAGE	TERMINAL CONNECTIONS FOR INCREASING VOLTAGE AS VIEWED FROM ROTOR END: INPUT	TERMINAL CONNECTIONS: OUTPUT
SINGLE PHASE	240	50/60	0–240	35	8.4	CW	2–4	2–3
						CCW	4–2	4–3
			0–280	35	9.8	CW	2–5	2–3
						CCW	4–1	4–3
	120	50/60	0–280	35–15# V.D.	4.2 ‡	CW	2–6	2–3
						CCW	4–7	4–3

UNLESS OTHERWISE SPECIFIED. TOLERANCE IS ±
DECIMALS .XX .010 .XXX .005 — HOLES .12 .002 — ANGLES 1° — DRAFT 1–1/2°

UNITS IN [mm]

MATERIAL

ALL DIMENSIONS APPLY AFTER PLATING

TITLE: SPEC. CONTROL DRAWING VARIABLE TRANSFORMER TYPE: 6020

STACO ENERGY PRODUCTS CO. A COMPONENTS CORPORATION OF AMERICA COMPANY DAYTON, OHIO U.S.A.

The information and design disclosed herein was originated by and is the property of STACO ENERGY PRODUCTS CO., which reserves all patent, proprietary, design, manufacturing, reproduction, use and sale rights thereto, and to any article disclosed therein except to the extent rights are expressly granted to others. The foregoing does not apply to vendor proprietary parts.

DRAWN BY	DATE	FIRST USED ON	DO NOT SCALE DWG.	CUSTOMER APPROVAL	DATE
TIM RAU	5/19/99				
CHECKER	DATE	WEIGHT APPROX. 63 LBS.	CODE IDENT. NO. 83008	DWG. SIZE D	DWG. NO. 032–7406
ENGINEER	DATE	SCALE .5=1	SHEET 1 OF 1		